

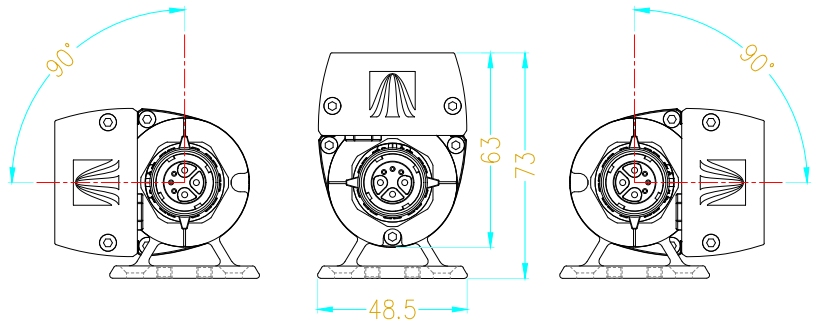

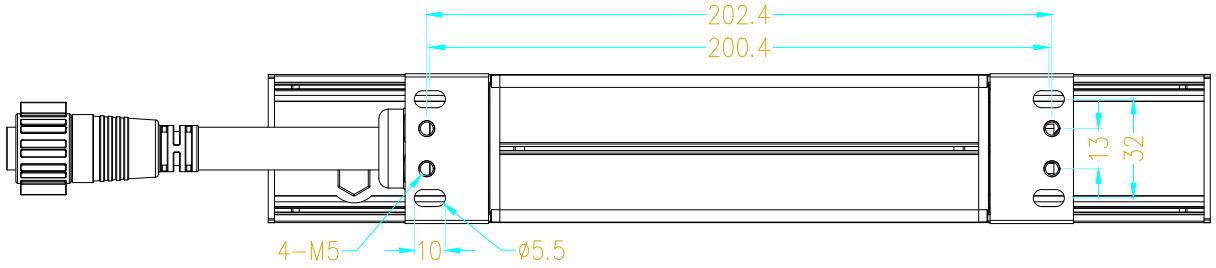

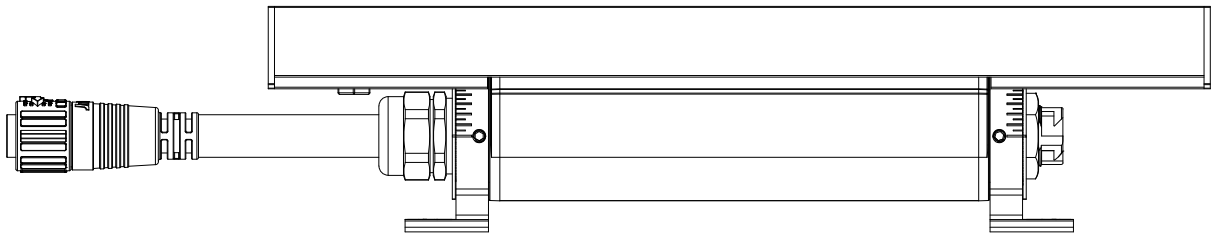

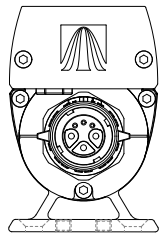

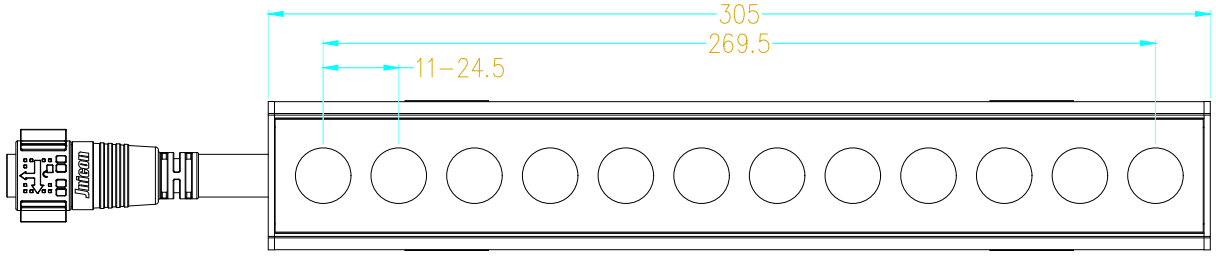

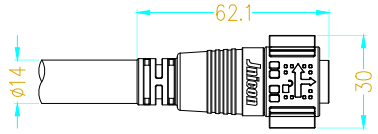

Acclaim™	PROJECT TITLE: Linear-XTR-S2-IP66-305	Revision:	Drawing Title:	Dwg. No.:	Rev.: 1.0	Project No.	
			Scale:	Date: 06.15.2026	Drawn By:	Approved By.	
			Page No.: 1	Total Page: 1	Checked By:		

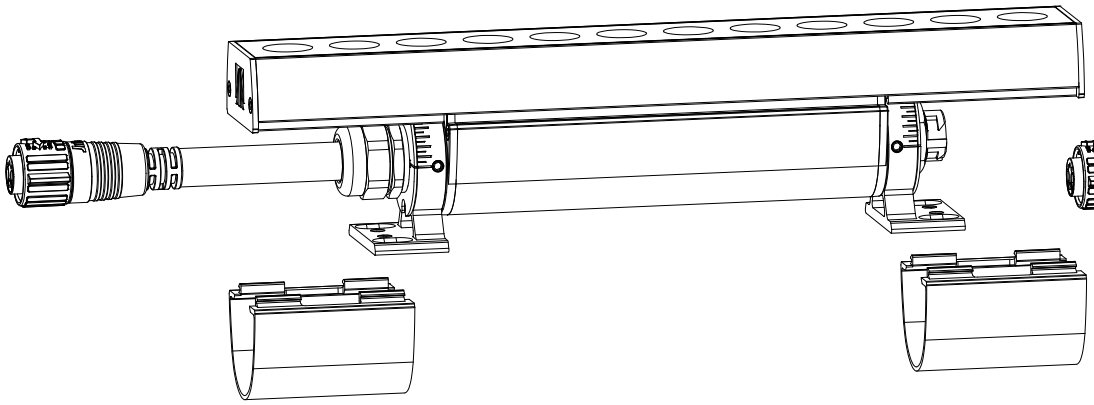

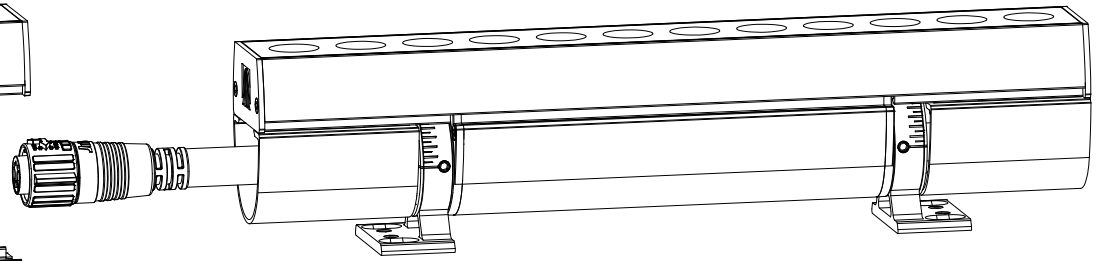

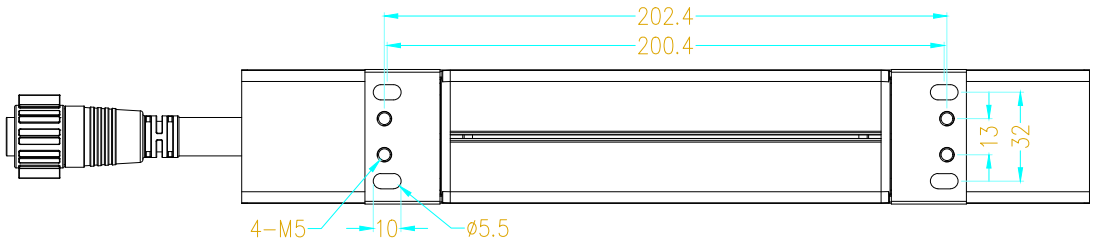

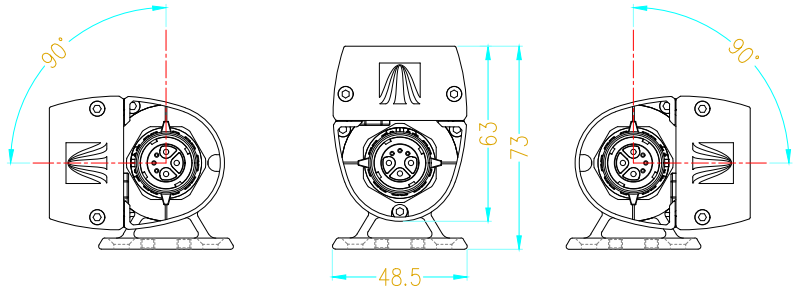

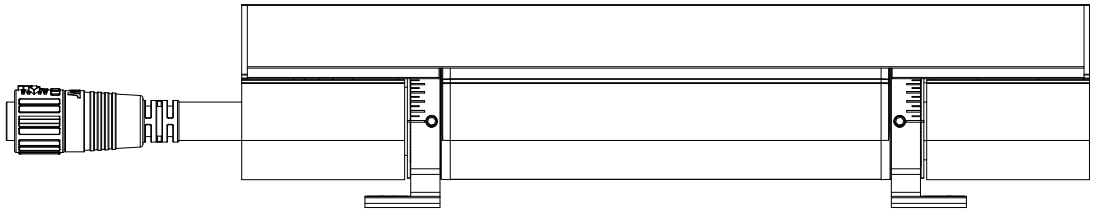

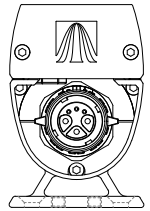

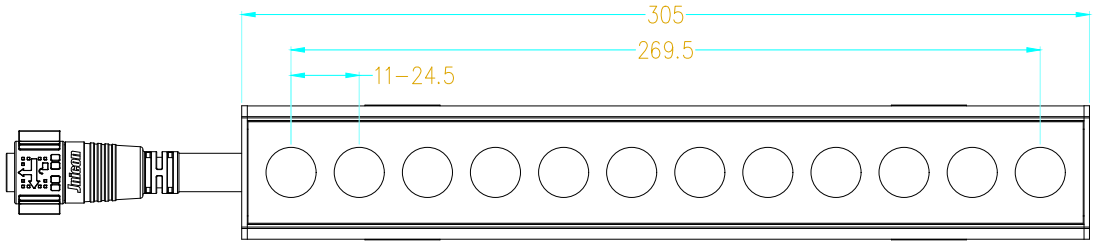

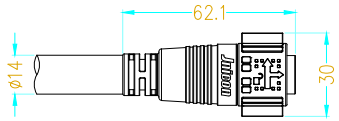

Acclaim™

PROJECT TITLE:

Linear-XTR-S2-IP66-305

Revision:						Drawing Title:		Dwg. No.:	Rev.: 1.0	Project No.
						Scale:	Date: 06.15.2026	Drawn By:		Approved By.
						Page No.: 1	Total Page: 1	Checked By:		

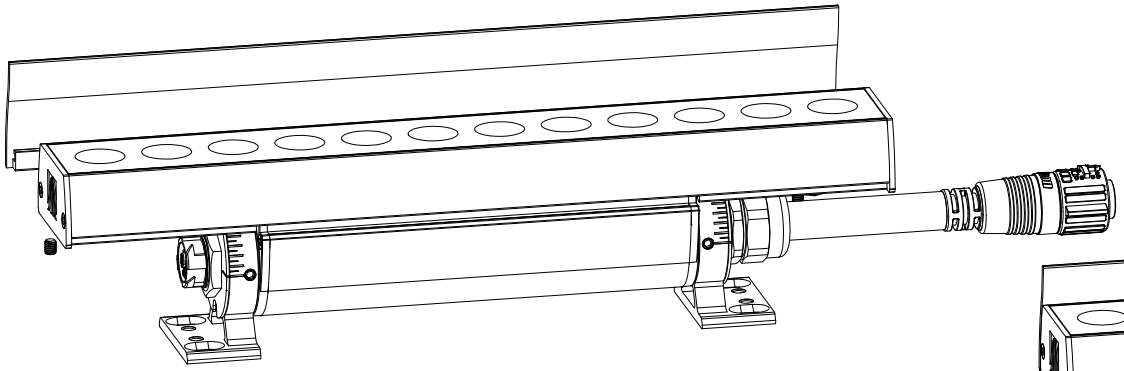

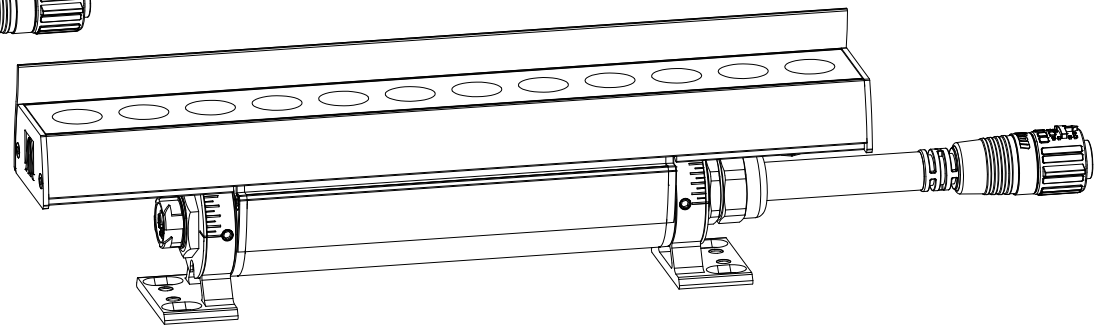

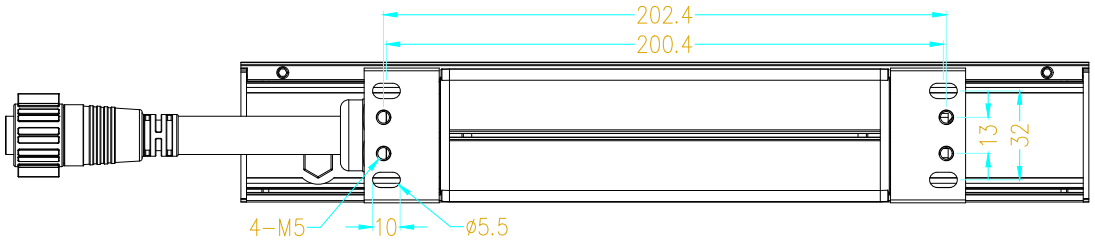

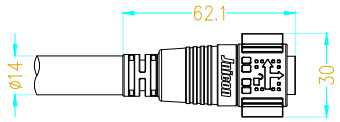

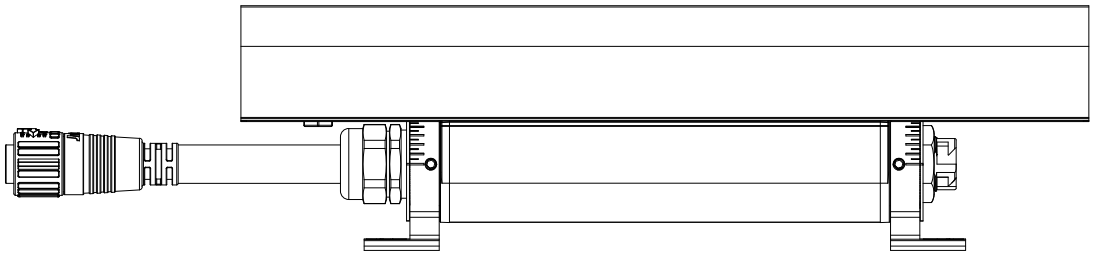

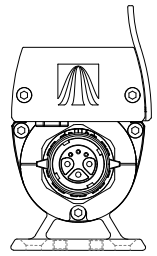

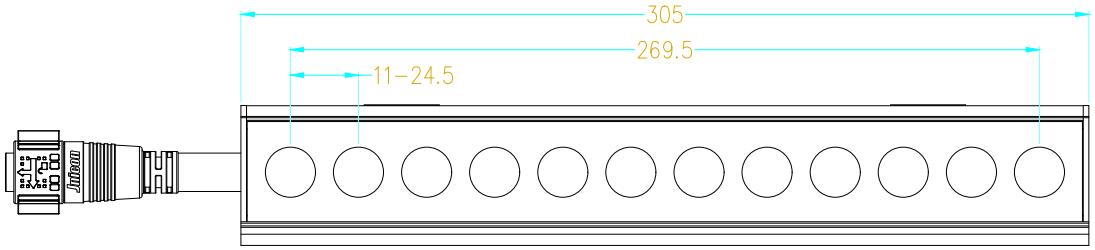

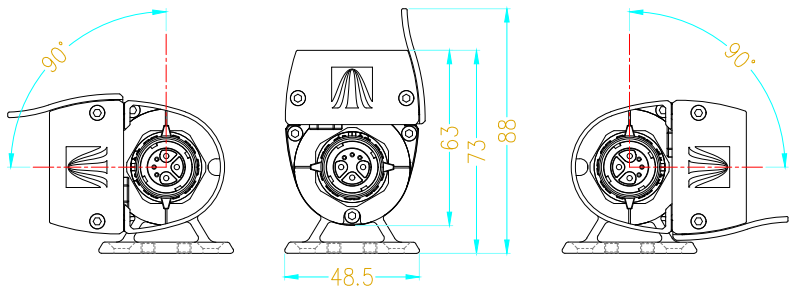

Acclaim™

PROJECT TITLE:

Linear-XTR-S2-IP66-305

Revision:						Drawing Title:		Dwg. No.:	Rev.:	Project No.
									1.0	
						Scale:	Date: 06.15.2026	Drawn By:		Approved By.
						Page No.: 1	Total Page: 1	Checked By:		

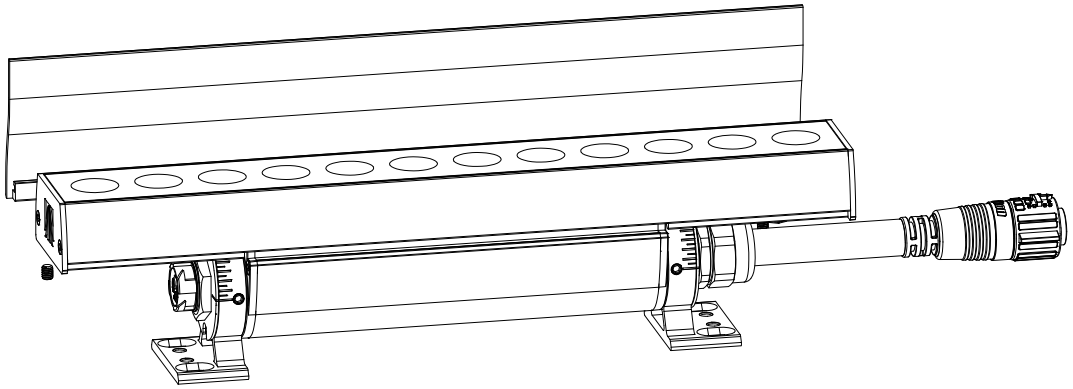

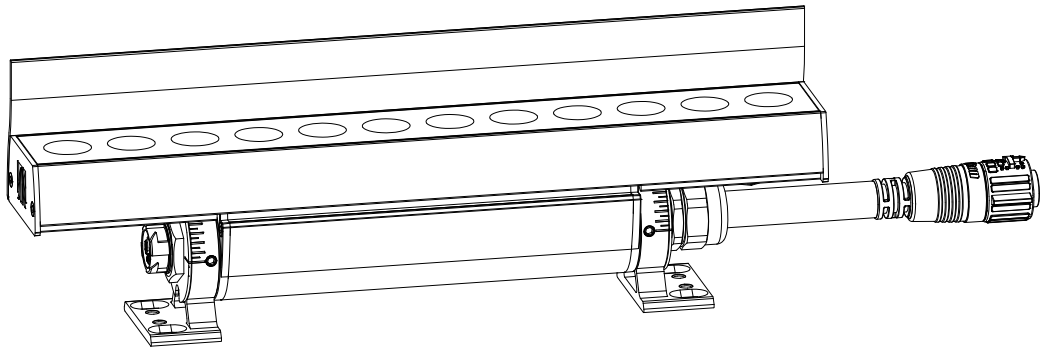

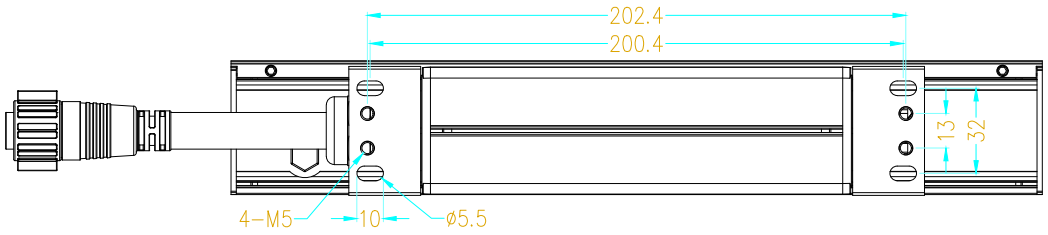

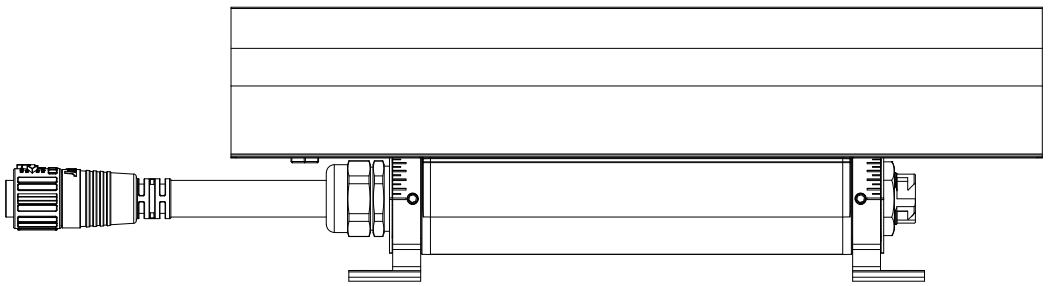

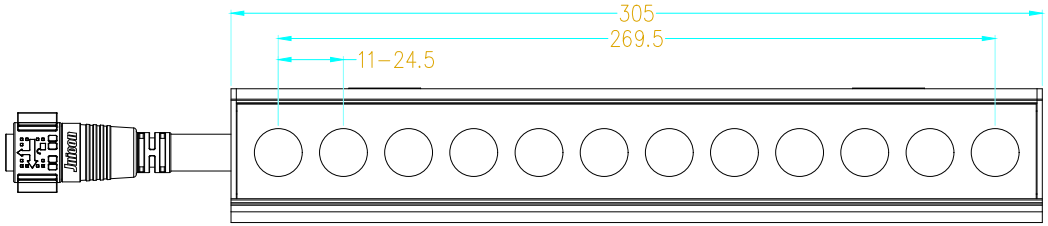

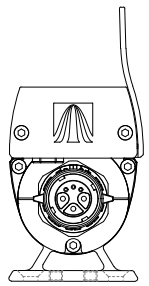

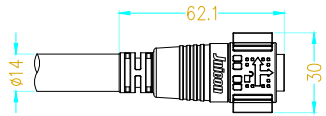

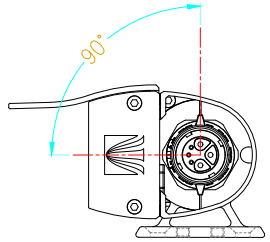

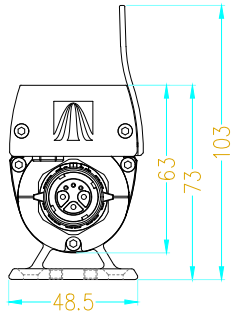

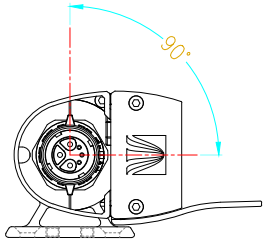

Acclaim™

PROJECT TITLE:

Linear-XTR-S2-IP66-305

Revision:						Drawing Title:		Dwg. No.:	Rev.: 1.0	Project No.
						Scale:	Date: 06.15.2026	Drawn By:		Approved By.
						Page No.: 1	Total Page: 1	Checked By:		

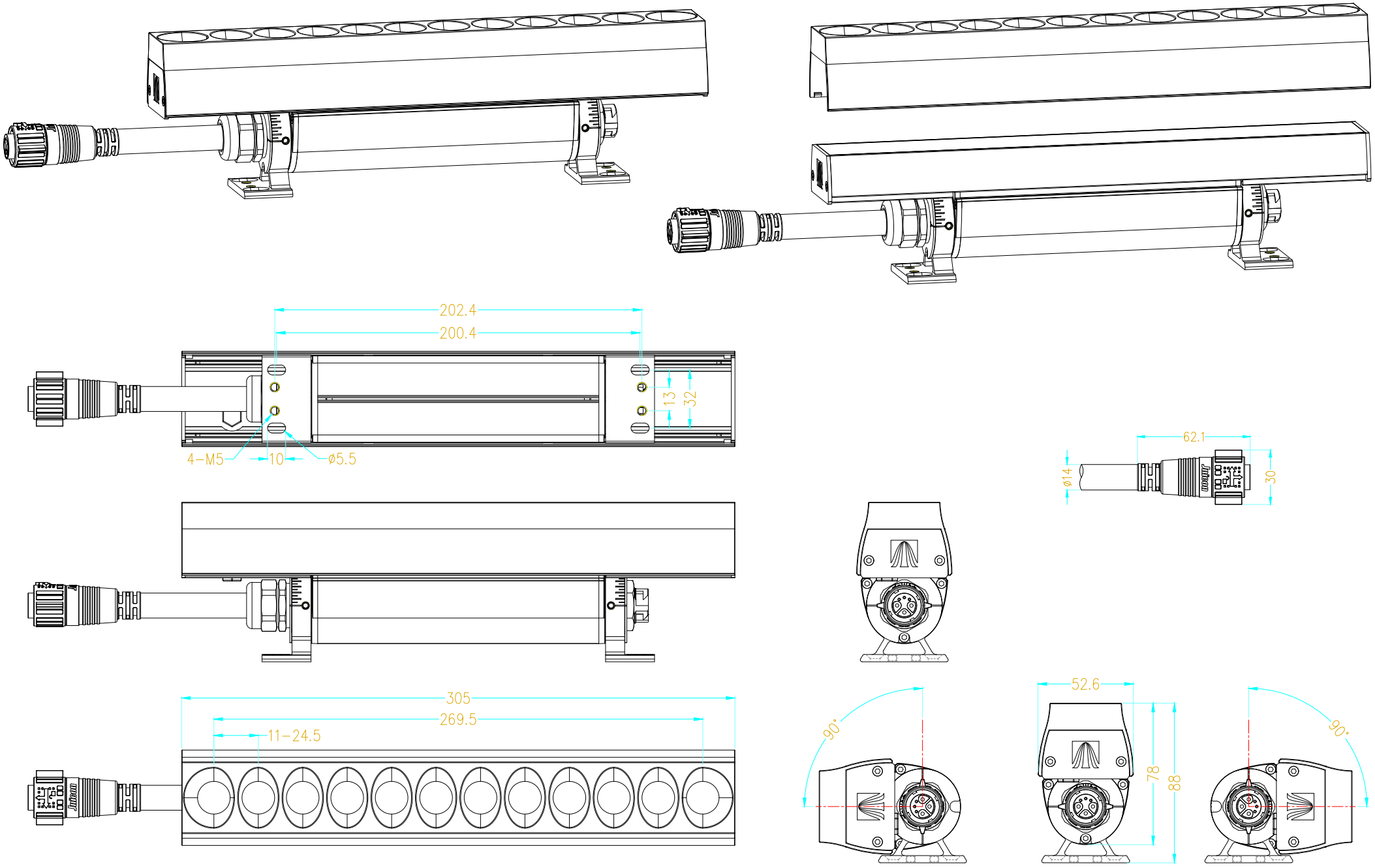

Acclaim™

PROJECT TITLE:	Revision:	Drawing Title:	Dwg. No.:	Rev.: 1.0	Project No.
Linear-XTR-S2-IP66-305		Scale:	Date: 06.15.2026	Drawn By:	Approved By.
		Page No.: 1	Total Page: 1	Checked By:	

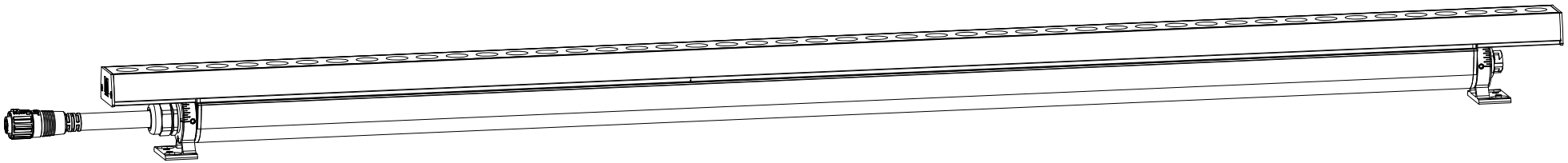

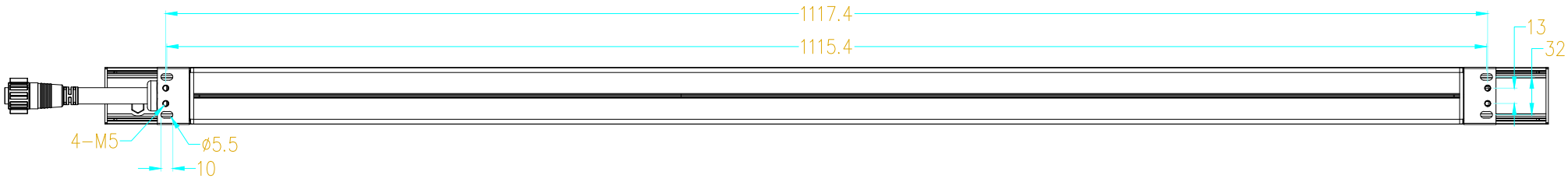

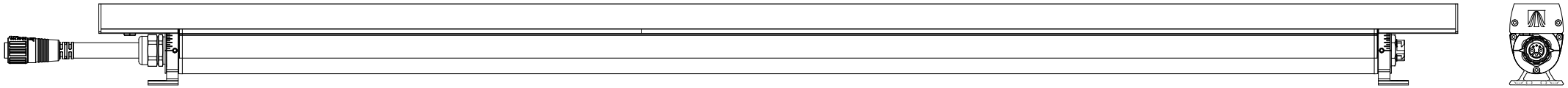

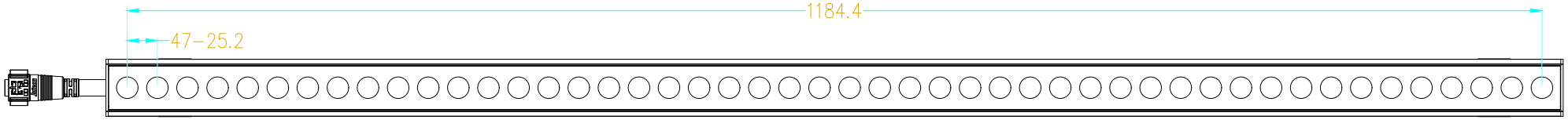

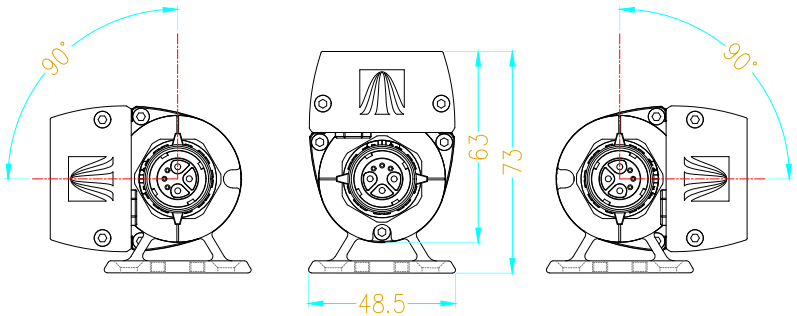

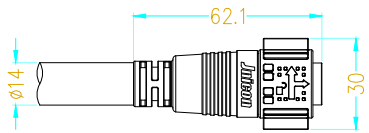

Acclaim™	PROJECT TITLE: Linear-XTR-S2-IP66-1220	Revision:		Drawing Title:		Dwg. No.:	Rev.: 1.0	Project No.	
				Scale:	Date: 06.15.2026	Drawn By:		Approved By.	
				Page No.: 1	Total Page: 1	Checked By:			

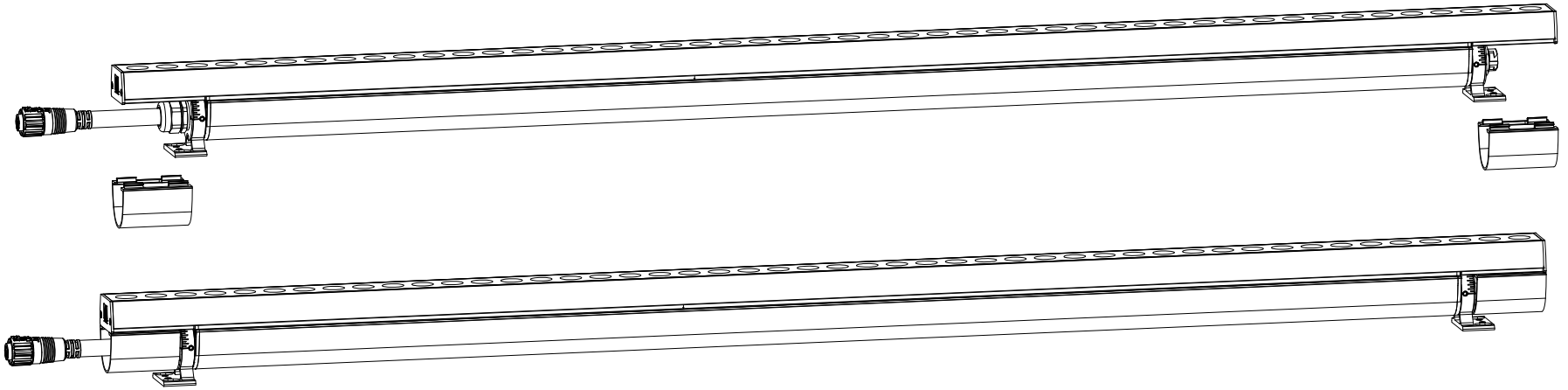

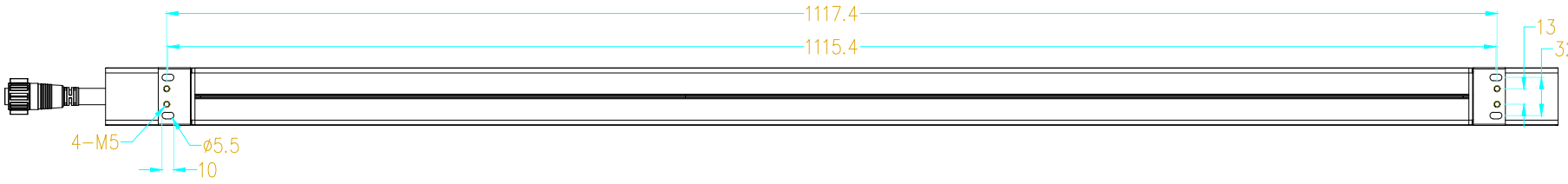

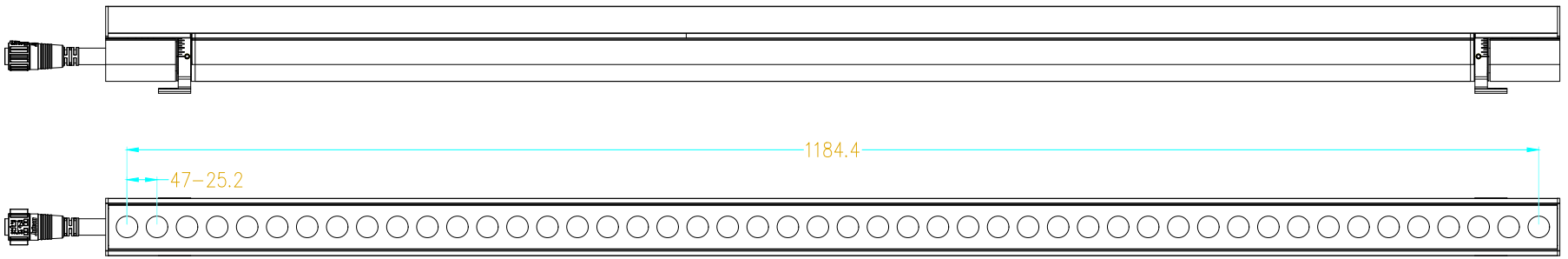

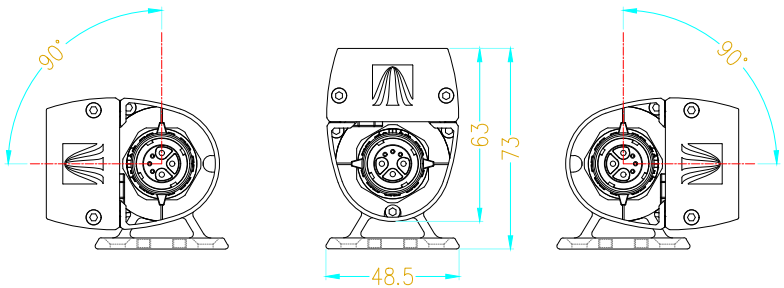

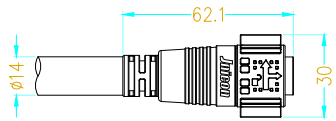

Acclaim™

PROJECT TITLE:

Linear-XTR-S2-IP66-1220

Revision:						Drawing Title:		Dwg. No.:	Rev.: 1.0	Project No.
						Scale:	Date: 06.15.2026	Drawn By:		Approved By.
						Page No.: 1	Total Page: 1	Checked By:		

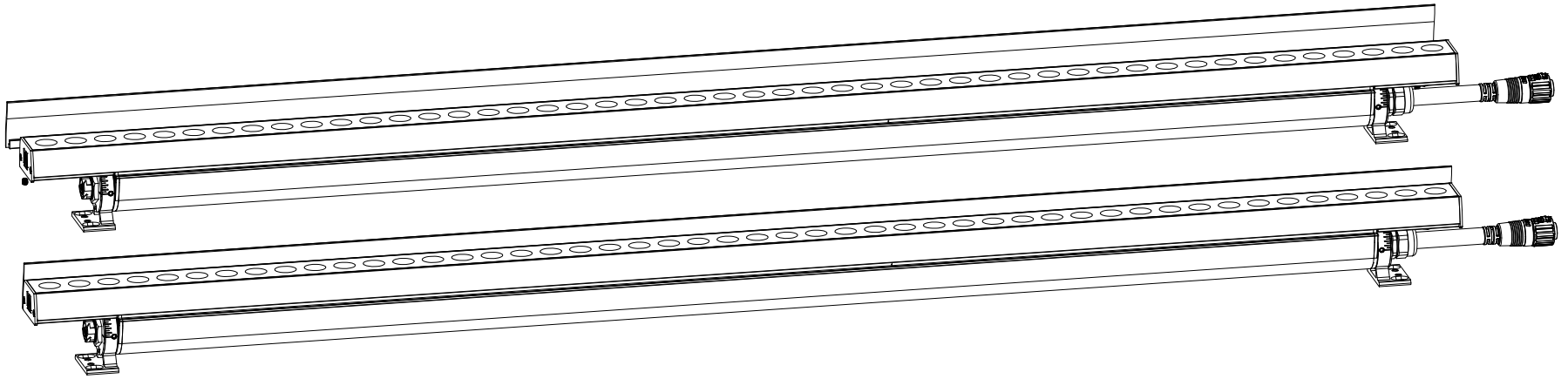

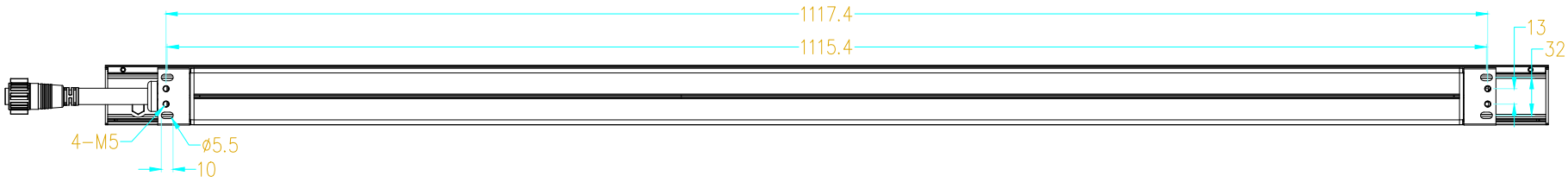

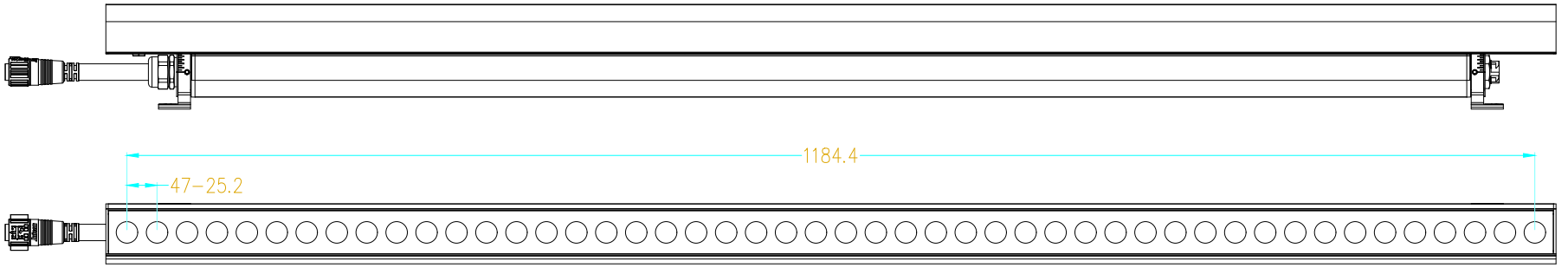



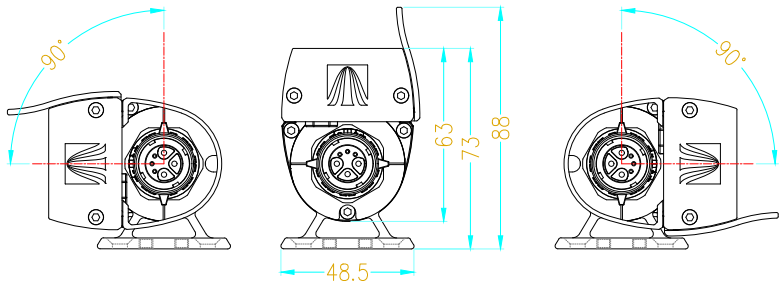

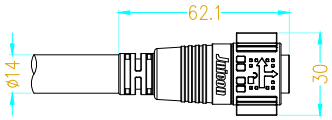

Acclaim™

PROJECT TITLE:

Linear-XTR-S2-IP66-1220

Revision:						Drawing Title:		Dwg. No.:	Rev.:	Project No.
									1.0	
						Scale:	Date: 06.15.2026	Drawn By:		Approved By.
						Page No.: 1	Total Page: 1	Checked By:		

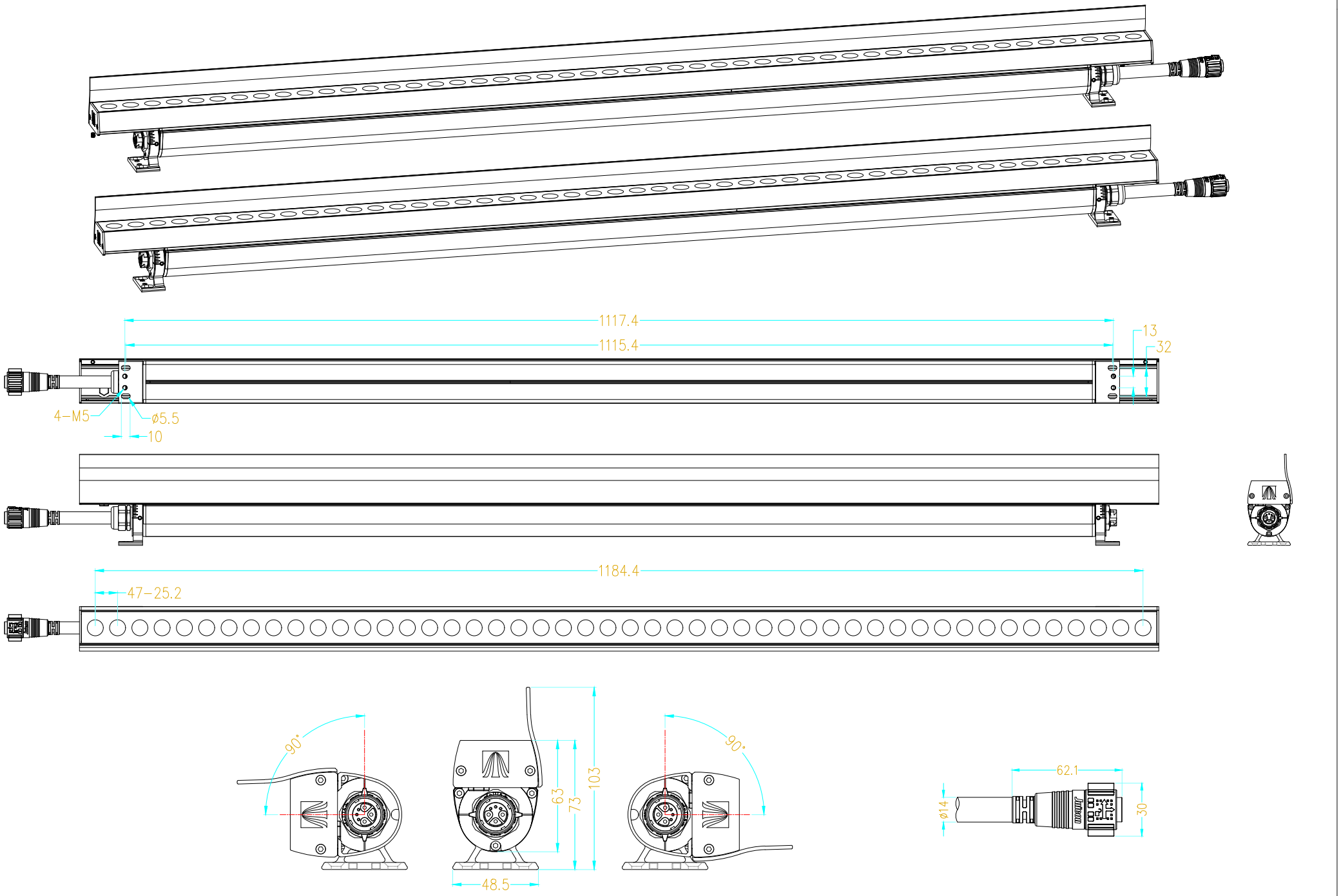

Acclaim™	PROJECT TITLE: Linear-XTR-S2-IP66-1220	Revision:	Drawing Title:	Dwg. No.:	Rev.: 1.0	Project No.
			Scale:	Date: 06.15.2026	Drawn By:	Approved By.
			Page No.: 1	Total Page: 1	Checked By:	

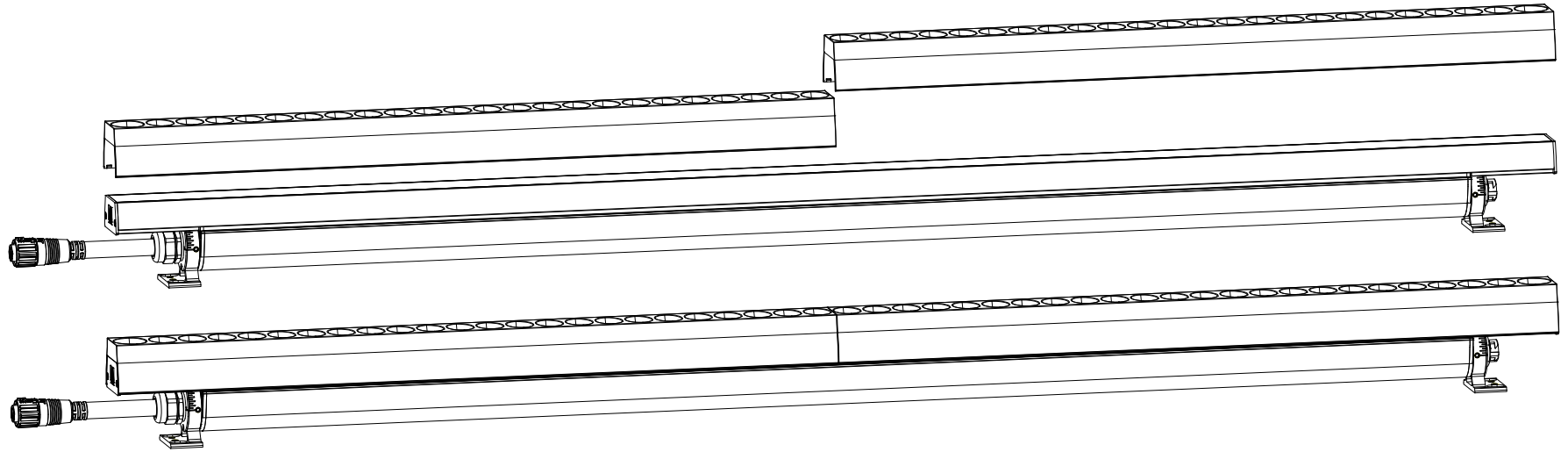

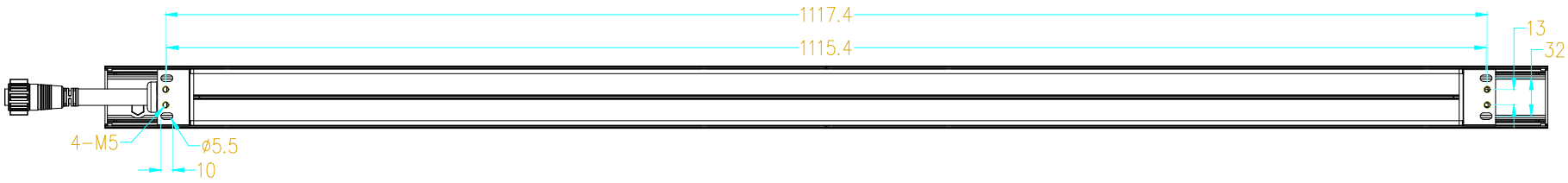

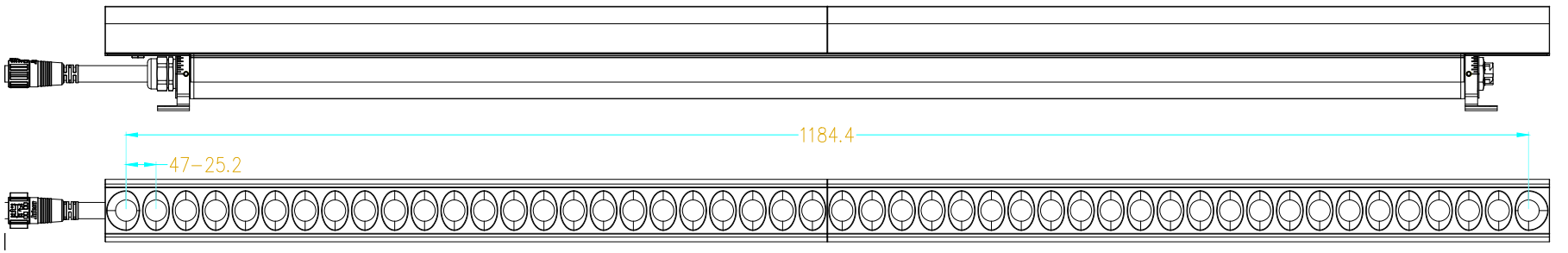

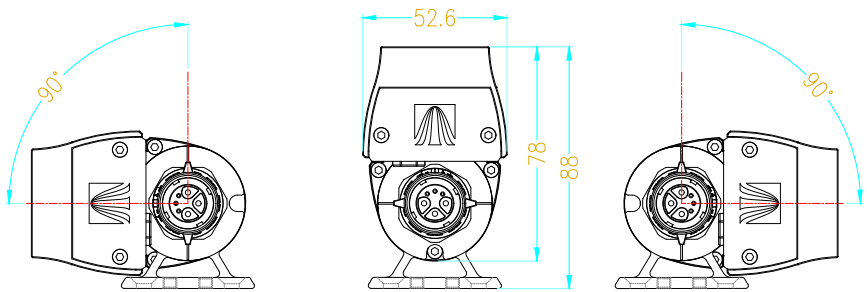

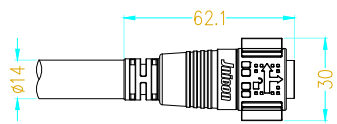

Acclaim™	PROJECT TITLE: Linear-XTR-S2-IP66-1220	Revision:		Drawing Title:		Dwg. No.:	Rev.: 1.0	Project No.	
				Scale:	Date: 06.15.2026	Drawn By:		Approved By.	
				Page No.: 1	Total Page: 1	Checked By:			